INSTRUCTIONS MANUAL AND TROUBLESHOOTING

BLACK FEVER

PLAYMATIC SA

BARCELONA 30

SPAIN

TUCUMAN 26 - 28

phone: 345 85 04

telex: 53912 PLAY E

der to confirm that a new adjustment has been made. To surpass this stage it is necessary to disconnect and connect the machine.

INDEPENDENT ADJUSTMENTS

Starting from the former situation "St", each time the door push button is depressed, a new area of adjutment is reached. The CREDIT counter shows in what area is the adjustment and the 1st. PLAYER counter will show the value being adjusted presently. To modify such value, the GAMES push button has to be depressed in order to increase the amount. Whe the button is held depressed, the amount will increase more rapidly. When reaching the total value wished, release the preasure upon the push button and increase the amount one by one until the total wished. This value will be fixed when passing to a new area or disconnecting and connecting the machine.

In the following list the different adjustments, as well as the areas, display readings for the 1st. PLAYER and the value of the STANDARD adjustment are listed:

OBJECT OF THE ADJUSTMENT	AREA	R E A D I N G	STANDARD
Maximum number of credits	01	00 up to 99	15
HIGH SCORE scoring	02	000. up to 990.	700.
Free game first score	03	000. up to 990.	500.
Free game second score	04	000. up to 990.	650.
Free game third core	05	000. up to 990.	000.
Games per coin first coin rejector .	06	0,3-0,5-1-1,5 up to 39	0,5
Games per coin second coin rejector .	07	0,3-0,5-1-1,5 up to 39	3
Games per coin third coin rejector .	08	0,3-0,5-1-1,5 up to 39	5
Maximum amount of EXTRA BALLS	09	0-1-2-3 extra balls	3
Free games when HIGH SCORE is reached	10	0-1-2-3 free games	1
Music only in prizes, start and end .	11	0=NO 1=YES	0
Music every 10 minutes	12	0=YES 1=NO	0
Type of sound	13	0=effects 1=bells	0
Prizes by SPECIAL	14	0=game 1=ball	0
Prizes by scoring	15	0=game 1=ball	0
Return to HIGH SCORE initial value. .	16	0=YES 1=NO	0
Match feature	17	0=YES 1=NO	0
Number of ball per game	18	0=3 balls 1=5 balls	0
Games for each player	19	0=several 1=1 only	0
Players rotation	20	0=altern. 1=contin.	0
Bumper scoring	21	0=1K/100 1=10K/1000	0
Targets D10, D11, D12, D13	22	0=1000 1=10000	0
Targets D1, D2, D3	23	0=1000 1=5000	0
Corridor P1	24	0=500 1=5000	0
Corridor P3, P4	25	0=2000 1=500	0

If the door push button is held once more, when being in area 26, the reading returns to area 01. To surpass this stage it is necessary to disconnect and connect the machine.

REMARKS:

Maximum number of credits. AREA 01.

It is the maximum number accepted by the CREDIT counter. Below it it is possible to increaseit, by means of coins or by games during the play. When one coin adds games, so that the maximum amount to which it has been adjusted is surpassed, the games will be added the first time. When the number in the CREDIT counter is the same or superior to the maximum, the coin rejectors will automatically be blockaded.

When the maximum number of credits is adjusted to 00, then the machine will play without coins, the limit will remain at 99 and the coin rejectors will be blockaded. (This adjustment is used por home play or at exhibitions).

HIGH SCORE scoring. AREA 02.

When it is adjusted to 000.000 the HIGH SCORE prize will be totally disconnected.

Free game. AREAS 03, 04 & 05.

When it is adjusted to 000.000 the corresponding prize will be disconnected. (Two prizes in the same scoring will be like one).

Games per coin. AREAS 06, 07 & 08.

The reading 0,3 indicates that 3 coins are needed for a game.

The reading 0,5 indicates that 2 coins are needed for a game.

The reading 1,5 indicates that 2 coins will give three games.

Maximum amount of EXTRA BALLS. AREA 09.

It indicates the maximum amount of extra balls that the counter will accumulate. When it is adjusted to 0, no extra ball will be given.

Free games by HIGH SCORE. AREA 10.

Number of games the machine will give when reaching the HIGH SCORE. When it is adjusted to 0, instead of games, will give an extra ball.

Music only in prizes, start and end. AREA 11.

When it is adjusted to 1, only the music of bells sounds when getting prizes, when introducing coins, at the start of game and at the end when GAME OVER

appears. Adjusting it to 0, the selected music in the AREA 13, sounds in any contact when scoring, besides all other moments already mentioned.

Music every 10 minutes. AREA 12.

When it is adjusted to 0, approximately every ten minutes, while the machine is in GAME OVER, a tune will sound.

Type of sound. AREA 13.

Two sound may be selected: At 0 the sounds are special effects and at 1 the sounds will be melodic, similar to bells. At the IOS board there is a potentiometer that regulates the volume of the two sounds.

Prizes by SPECIAL. AREA 14.

The prizes given by SPECIAL, except the ones for HIGH SCORE and scoring (which are regulated by other areas), may be either one game or a ball, whenever the regulation is 0 or 1.

Prizes by scoring. AREA 15.

When reaching the scoring set in the AREAS 03, 04 or 05 the machine will add a game or extra ball, whenever the regulation is 0 or 1.

Return to HIGH SCORE initial value. AREA 16.

When the HIGH SCORE scoring is above 899.900, when disconnecting and connecting again the machine, the HIGH SCORE returns automatically to 700.000. (This is also automatically achieved when the machine is switched off during the night and switched on in the morning).

Match feature. AREA 17.

Match feature is disconnected when it is regulated at 1.

Number of balls per game. AREA 18.

The machine will play with three or five balls per game, besides the ones the player can get by EXTRA BALL, according to the regulation set.

Games for each player. AREA 19.

When it is adjusted to 0, the machine may accumulate free games up to the number of credits of the AREA 01 adjustment.

When it is adjusted to 1, the machine will only add the first game obtained

by each player and the other ones during the play will be EXTRA BALL.

Players rotation. AREA 20.

When it is adjusted to 0, each player plays the corresponding balls alternatively.

When it is adjusted to 1, each player plays the corresponding balls continuously.

BUMPER scoring. AREA 21.

When it is adjusted to 0, the bumper scores 100 points when it is off and 1.000 when it is on.

When it is adjusted to 1, the bumper scores 1.000 points when it is off and 10.000 points when it is on. (Remember to change the bumper cap in accordance with the score).

Targets bank scoring (24, 25, 26, 28) AREA 22.

When it is adjusted to 0, when the target is dropped scores 1.000 points.

When it is adjusted to 1, when the target is dropped scores 10.000 points.

Targets D1, D2, D3 scoring (21, 22, 23) AREA 23.

When it is adjusted to 0, the targets score 1.000 points.
When it is adjusted to 1, the targets score 5.000 points.

Corridor P1 scoring (11) AREA 24.

When it is adjusted to 0, the corridor scores 500 points.

When it is adjusted to 1, the corridor scores 5.000 points.

Corridor P3, P4 scoring (35,36) AREA 25.

When it is adjusted to 0, the corridors score 2.000 points.

When it is adjusted to 1, the corridors score 500 points.

- - - - - - -

GENERAL GUIDE FOR REPAIRS

The modular system designed for that machine allows the replacement or repair of any faulty unit in a very short time because the modules con be replaced on the spot, where the machine is located, by a new one, whenever the failure is of electronic origin. To this end, all modules are of a reduced shape in order to facilitate the repair or its transportation when necessary. For this purpose there are cases with a complete set of modules as well as the necessary tools to substitute them.

In order to know which are the modules to be substituted it is important to follow these general guides:

IMPORTANT ! TURN OFF POWER BEFORE REMOVING OR REPLACING ANY OF THE BOARDS.

1) The light box display, the lights controlled and the flippers do not work.
... Substitute, following the same order, until the failure is found: PSU (checking the fuses), MPU, IOS.

2) No one display lits but some controlled light lits permanently.
... Substitute, following the same order,until the failure is found: PSU, (checking the fuses), MPU, IOS.

3) No one display lits but some controlled lights lit alternatively.
... Substitute, following the same order, until the failure is found: DPY first player, IOS.

4) The display of one or several players lits, changing from 000000 to 999999, but not all.
... Substitute, following the same order, until the failure is found: DPY first player, DPY second player, DPY third player, DPY fourth player DPY STATUS.

5) The sound fails.
... Substitute, following the same order, until the failure is found: IOS, loudspeaker.

6) Some of the controlled lights never lits.
... Substitute, following the same order, until the failure is found: LIGHTS FUSES, LITTLE LAMP, the corresponding BLC (see the number of the little

lamps or change the three BLC). Note that the bumper lights have a rectifier in the playfield.

7) Some controlled little lamp, other than GAME OVER or HIGH SCORE, is always lit.

... Substitute, following the same orden, until the failure is found: Corresponding BLC (see little lamps numbers) or change the three BLC successively.

8) Some memorized drop-target solenoid does not work.

... Substitute, following the same order, until the failure is found: BTC, IOS.

9) Bumpers, flippers, kickers, ball return, guns, "taca".

... Substitute, following the same order, until the failure is found: First check whether the corresponding relay closes properly, if not change: BSC, IOS.

- - - - - -

DESCRIPTION OF THE MPU BOARD

In this board there is the MICROPROCESSOR set which is composed of:

1 CPU (6) COSMAC CDP1802.
2 RAM MEMORY (7A) & (7B) 5101.
4 ROM MEMORY (8), (9), (10) & (11).
2 MEMORY ADDRESS DECODER (3) & (5) 1859.
1 INPUT/OUTPUT DECODER (1) 1853.
1 DUAL D-type Flip-Flop (2) 4013.
1 TIMER COUNTER (4) 4020.

The CPU board controls the operation of the whole machine, following the programme of the ROM memories. It receives and sends the signals coming or with destination to the several elements of the machine through the IOS board, to which it is connected by the connections MRD, 101, 102, 103, 104, 105, 106, 107, TPB, BUSØ-BUS7 & CKD.

The DECODERS (3) & (5), generate the addresses A8, A9 & AlØ which are not directly obtained from the CPU as the AØ-A7, and by means of the outputs CEØ, CEl, CE2 & CE3, only connect one of the RAM devices (7) or ROM (8-11) to the data bus BUSØ-BUS7.

The decoder (3) when reciving the TPA pulse, holds the value of MA2 and of MA5. Thus making:
1: When MA5 is high makes -CS of the RAM (7) selecting low. When MA5 is low makes -CS of the RAM (7) high disconnecting them.
2: When -MRD is high makes its output CEØ high therefore the decoder (5) will disconnect the ROM.
3: When MA2 is high makes AlØ high. When MA2 is low makes AlØ low.

The decoder (5) when receiving TPA holds the value of MAØ, MAl and MA2, MA3 if memories of 1Kx8 are used. It also holds the value of MA3, MA4 if the memories of 2Kx8 are used. Thus making:
1: If MAØ, MAl are high makes A8, A9 high respectively and on the contrary.
2: If the input -EN coming from the circuit (3) is high, all the CEØ, CEl, CE2, CE3 are high and the ROM (8-11) are disconnected.
3: If the input -EN is low, according to the value hold of MA2, MA3 or MA3, MA4, selects one of the ROM making one of the CEØ to CE3 low and the rest high.

The RAM MEMORIES (7A & 7B) are continuously powered, even when the machine is disconnected from the line, by means of a buffer battery which recharges itself when the machine is connected to the line. This is in order to keep the information stored, which, in another way would be lost. This information corresponds to the book-keeping functions, tones, etc. as well as the accumulators for coins, games, prizes, etc. These memories are internally disconnected when its input CS (pin 17) is low. It occurs when the a.c. line is disconnected. In that way the information kept is preserved.

The CPU board (6) controls these memories TAM by means of the addresses MAØ - MA6 which indicate to which word it is addressed and for the signals -MRD, -MWR, -CS.

When the CPU board needs to read or write in the RAM, makes its -CS low through de decoder (3). When it has to read -MRD will be low and -MWR will be high. When it has to write -MRD will be high and -MWR will be low.

As every memory is organized in 256 words of 4 bits, two of them have been placed with all connections in paralel, except the one for the data bus. In the memory (7A) BUSØ-BUS3 have been connected and BUS 4-BUS7 in the memory (7B).

The DECODER I/O (1) generates the signals IO1 to IO7 from NØ, N1, N2, TPA, TPB, which are used to control the IOS board.

The value of NØ, N1, N2 is held from the moment it receives the pulse from TPA until it receives the one from TPB. With these three signals NØ, N1, N2 decoded, eight possible cases are obtained, which correspond to make low all signals IO1 to IO7 orelse to make high one of them, precisely the one corresponding to the input or output device located in the IOS board to which the CPU board wants to connect in order to receive or supply information.

The FLIP-FLOP (2), located on the left hand side of the scheme of the board, generates the clock signal used to transmit syncronously the information that controls the display boards through a shift register located in the IOS board.

The FLIP-FLOP (2), located on the right hand side of the scheme of the board, memorizes the interrupt request generated in the PSU power supply board, at the beginning of each half cycle of the a.c. line. The request is entered in

the CPU by its INT input. Once processed, the CPU send a pulse by IO7 which resets such memorization (both flip-flop are in the same integrated circuit (2).

The TIMER COUNTER (4), generates a pulse every 2,77 miliseconds which is carried to the INT input of the CPU through the flip-flop located on the right producing an interrupt so that the CPU refresh the information loaded in the multiplexed display.

The -RST signal coming from the PSU power supply is low when the machine is disconnected from the line and also a few tenth of a second after connecting it. In this situation, it disconnects the RAM to preserve their contents and makes the CPU start the reading of the ROM programme by the start of it.

The signal SYNC generated in the PSU board is high during a line half cycle and low during the following and so sccessively. It is connected to the CPU by -EF3 and it is used by that in order to know whether to activate the little lamps connected to the 10 Volts A orelse to the 10 Volts B.

DESCRIPTION OF THE IOS BOARD

This board is the connection between the rest of the system and the machine with the MPU, where there is the micriprocessor set.

It uses the following devices:
5 INPUT/OUTPUT PORTS (2), (3), (4), (7) & (8) 1852.
1 PROGRAMMABLE DIVIDER (5) CDP1863
2 DARLINGTON & TRANSISTOR ARRAYS (1) 75492 & (9) 3086.
1 SHIFT REGISTER (6) 4021.

The devices of the PORTS I/O, DIVIDER & SHIFT REGISTER, receive or send information to the CPU through the data bus BUSØ to BUS7 when the corresponding signal IO1-IO7 is valid and TPB is also valid.

The ports (3) & (4) are used as input ports. All the connections from the push buttons and machine contacts reach them. At the port (4) the contacts from the playfield are connected in array, C1 to C6 by one side and O1 to O8 by the other side. At the port (3) the cabinet push buttons are connected as well as the one for the resetting of the accumulators, which is located in this board.

The inputs coming from the micro switch, corresponding to the coin rejectors 1M, 2M & 3M, have a delay network composed of a resistor and a capacitor, whose work is to prevent the pulses from being too short (the ones produced when shaking the door) reach the input port (4).

The ports (7) & (8) are used as output ports. To them are connected the boards that control the lights, relays, etc.

The port (2), connected as output port, sends to the display the information that controls the anodes of the multiplexed digits through the darlington drivers of the device (1) and the transistors TR1 to TR6. From the colector of such transistors the information which controls the columns of the input array C1 to C6 is derived by means of resistors.

The PROGRAMMABLE DIVIDER (5), divides the oscillation coming from the CPU through the line TPB by a programmable value from the CPU. At the output nominated OUT it is found the square wave which is applied to the gain controlled amplifier composed of the device (9) and the associated components. The gain of this amplifier is controlled by the output D07 of the port (2) and by the potentiometer. A power transistor BD244 supplies the necessary amplification to attack the loud-speaker.

The capacitor connected to the pin 6 of the device (9) is powered by an internal transistor of this device when D07 of the device (2) is high. When making D07 low, such capacitor is slowly discharged through a shunt resistor. The voltage of such capacitor is applied through another internal transistor of the device (9) and the potentiometer of the amplifier. When loosing power the volume diminishes obtaining the fadding effect of the sound.

The SHIFT REGISTER (6), recives the information in paralel coming from the CPU by BUSØ-BUS7 when I02 is valid and transmits in serial to the display boards syncronously by means of the clock CKD.

DESCRIPTION OF THE BLC BOARD (CONTROL OF LIGHTS)

This board, (which in number of three equips this machine) has the job of controlling the lights of the game, which are the ones that lit in accordance to the progress of the play. They control up to sixteen groups of little lamps.

It is composed of a decoder 4028, eight thyristors C106F, eight resistors and

sixteen rectifier diodes. Each thyristor can control two groups of little lamps which are powered from the transformer with two half-cycles opposite to the a.c. voltage.

The control inputs DØ, D1, D2 & D3, come from the device output (8) of the IOS board.

The inputs DØ, D1 & D2 are in charge of determining the address to which of the eight outputs must be connected. The fourth input D3 is high when such address must not be connected and low when it must be connected.

The pulse applied to the port of the thyristors is of a very short lenght of time, around 20 microseconds and enough to turn-on the thyristors which, once fired, will not disconnect until the end of the corresponding half-cycle. These pulses repeat in each half-cycle while the corresponding little lamp must be lit.

DESCRIPTION OF THE BTC BOARD (DROP TARGETS)

Not applicable to this model.

DESCRIPTION OF THE PSU (POWER SUPPLY UNIT) BOARD

The power supply unit provides the necessary voltages for the electronic operations of the machine.

The given voltages are: +6, +12, -5 volts and, in the same board the signals RST, -RST, INTR and SYNC are generated.

The 6 volts voltage is obtained from a full wave rectifier formed by two diodes

of 3 amperes (BYS51), filter capacitor, power transistor (BD244), monolithic voltage regulator (LM341-6) and power resistors which with the diodes protect the power transistor in case of overload.

The voltage of 12 volts is obtained from a full wave doubler formed by a monolithic bridge rectifier (VM18) and three capacitors, that circuit gets a voltage from 15 to 27 volts (according to the voltage of the primary) which is subsequently reduced and stabilized by mean of a monolithic voltage regulator of 0'5 amperes (LM341-12).

The voltage of -5 volts is obtained from a full wave rectifier formed by two diodes of 1 ampere (IN4001).

The signal of INTR is derived from the two opposite voltages of supply, so thus a pulse whose rising edge is at the beginning of each half cycle of the a.c. line. That signal will be used to synchronize the shot of the thyristors that control the lights of the game, with the beginning of the half cycle of the a.c. line voltage. The same pulses are carried to a RC network which integrates them so thus their output will be high if one only half cycle is missing in some of both inputs of 11 volts a & B coming from the transformer. Amplified and inverted by means of a logic gate, this signal is used to charge, slowly through a resistor and discharge quickly through a diode, an electrolitic capacitor. This signal is once more amplified by two invert gates. From the first output it is obtained RST and from the second output -RST.

When connecting the machine to the a.c. line RST are = 6 volts and -RST = 0 volts. After 0'5 seconds, when the capacitor has been charged RST are = 0 volts and -RST = 6 volts. Both signals are used to initialize the electronic system.

The signal SYNC is one of the sinusoidal inputs of the 11 volts A & B of the transformer converted into a square wave by means of a logic gate. This signal is used in the MPU to determine whether the game lights connected to the 11 volts A or to the 11 volts B must be lit.

DESCRIPTION OF THE BSC (RELAYS) BOARD

This board whose work is the one of activating the different solenoids of the machine, ball return unit, "taca", etc. is equipped with a 8 bit addres-

sable latch (4724), an eight darlington driver (DS8863) and up to eight relays.

The six inputs coming from the IOS board are: -EN whose work is to open all relays; three nominated A, B & C, which correspond to the address of which one is transmitting the information; one nominated DATA, which will be high if the determined relay for A.B.C. must close or low if the determined relay must open; finally, the signal -EN indicates to this latch when the information of the A.B.C. & DATA inputs is stable and valid to be pssed to the memory.

DESCRIPTION OF THE DPY (DISPLAY) BOARD

The display board is composed of one C.I. 8 bit shift register (74C164), an 8 darlington driver, 7 current limiting resistors and 6 digits of 10.000 points, etc. forming columns. Each one of these columns is supplied from the IOS board, independent from the others and sequencially, so that only one of the 6 digits of each board is lit in a given moment. As this process is effected at an speed of 50 times per second, the observer eyes creates the optical illusion that all digits are lit simultaneously.

Previous to the connexion of the anodes of each column, the cathodes of the segments of each digit to be lit are chosen, in order to form the wished number.

A shift-register as the ones used, when receiving a pulse from its CK input, situates at the A output the information which was at the DATA input. Simultaneously, the information which was at A passes to B, the one in B to C, and son on.

From the IOS board the 5 CK inputs of the 5 display boards and the DATA input of the display of the first PLAYER are driven. The output H of this display is connected to the DATA input of the display of the second PLAYER and so on until the display of the STATUS.

From the IOS board, before connecting a certain column, 40 pulses are sent for the connection CKD that supplies the inputs CK of the displays. Before every pulse DATA will be high or low, whether the segment to which such information must arrive will lit or not. Evidently, the eight first pulses correspond to the STATUS display, from nine to sixteen to the display of the fourth PLAYER,

from seventeen to twenty four to the display of the third PLAYER, from twenty five to thirty two to the display of the second PLAYER and from the thirty three to the forty to the display of the first PLAYER.

Once the segments have been selected, such informations, amplified by the drivers and limited their current by the resistors, are carried to the cathodes of the LED. The cathodes of the segments that occupy the same position in the six digits of every display are connected all together. Obviously, it will only lit the digits of the column which is supplied at this moment from the IOS board.

After 3 miliseconds, the column is disconnected, the information of the following segments updated and the column supplied, and so on.

- - - - - -

SPEAKING SYSTEM CONTROL BOARD

The basic funtion of this board is to control a 4 track stereo cartridge, or, which is the same, an 8 track monoaural cartridge.

To the A, B, C inputs the code of the track to be listened (from Ø to 7) is sent. The circuit selects in accordance with the code, one of the four tracks and, within it, one of the two channels; once the signal has been selected it is amplified and can directly attack a speaker with an output of 8 wats.

Operation:

Under normal conditions the flip-flop formed by the logic gates 3 and 4, has the output 3 in low and the 9 in high, the low logic level of pin number 3 holds the latch 4042 open, that is to say, the outputs Q follow exactly the logic level of the A, B, C inputs (D1, D2, D3), which in a rest position are in low, that means the outputs Q of the latch will be in high and the whole of the gates 1, 2 have a high logic level in their output.

On applying the code of the track to be listened in A, B, C the logic levels change of Q and $\overline{Q}$ which makes that at the output of the inverter 2 appears a low logic level. This state change differentiated by C3 and R4 gives a negative pulse to NAND 3 input (pin 1) and triggers the flip-flop: the output 3 changes into high and the output 9 changes into low.

This change provokes several consequences: The latch 4042 becomes blocked thus preventing the possibility of selecting new tracks until the presently selected has finished.

The low logic level of the pin 9 at the gate 4 through inverter 6 puts in motion the transport motor of the cartridge. The high logic level of the pin 3 at the gate 3, is applied to the pin 11 of the gate NAND 7.

Note that the outputs Q2, Q3 and the inverted of the 4042, are applied to a decoder formed by the 4 NOR 9, 10, 11, 12 in a way that, in accordance with the track selected, one of the NOR will have its output at high (tracks 1, 2, 3, 4). As the track, at this moment, is not selected at the input N, tension will not be applied to it. Then there is a low logic level at the input of the inverter 13, the high logic level of the output is applied through D5 to the inverter 17, which will be studied later, and to the pin 13 of the NAND 7 as the inputs 11 and 13 are in high logic level and the input 12 is the output of the oscillator formed by the inverter 5, R8 and C6 at the output of the

inverter 8, pin 2, there will be a square wave which activates intermittently the relay of track selection, located in the cartridge transport system, with a high logic level applied to the input N, which indicates that the reading head is on the selected track, changing the output 6 of the inverter 13 into low, which applied to the pin 13 of 7 blockades the oscillator and avoids the relay of track selection being activated and, at the same time, ceases to apply a high logic level to the input of the inverter 17.

Let us see now what happens with the part corresponding to audio.

At rest the pin 9 of the gate 4 is at high logic level thus making the analogic switch 18 to be open and, at the same time, through D4 sets a high logic level to the input of the inverter 17. On the other hand, the low logic level at the output 3 of the NAND 3, makes the flip-flop formed by the NAND 15 and 16 to be high at the output 10 and low at 11, this output holds the analogic switch 19 closed. Therefore the 18 is open and the 19 closed at rest, which makes that the input of the amplifier is only reached by the signals of the AUDIO input, or, which is the same, the ones generated by the pin-ball or the play which the cartridge carries.

When a track is being selected, the output 3 of 3 changes to high logic level and stops holding the flip-flop 15, 16 although, momentarily, their outputs do not change as the input 13 of 16 do not change. The low logic level of 9 blockades the analogic counter 18 but, through R28, some signal is being applied to the amplifier of the audio (LM383) which will be mixed with the signal of the cartridge when the counter 19 opens, which remains closed by the moment, by the low logic level of the output 11 of 16. In order that this changes the output of the inverter 17, it must change from high logic level to low logic level. Until now it has been fixed at high logic level through D4 and, while it is not selected, the correct track through D5. Once the correct track has been selected, the level of this input depends of the rest of the circuit which is now explained.

The output Q1 and its inverse of the latch determine which analogic counter (20 or 21) opens, which selects one of the two stereo channels of the track. The selected signal aside from going to the counter 19 to be amplified when this opens goes to the amplifier 24, which works in saturation so that, if there is signal in its input through C7 and D7, D6, the condenser C12 remains loaded and it unloads when there is no signal.

It is supposed the track is already selected and therefore by D4 and D5 a high logic level is not forced at the input 11 of 17. If the track is being selected

in the middle of a recording, the condenser will be loaded and there will continue being a high logic level in pin 11. When the message is ended, there is a silence and the condenser is unloaded and the pin 11 turns to low logic level and therefore its output becomes high logic level, pin 10. When a new message is started the pin 11 returns to high logic level, the output turns to low logic level. This step from high to low activates the input 13 of 16 and makes that the output 11 of the flip-flop 15, 16 turns to high logic level, which opens the counter 19 and the recorded message is heard. When the message is ended the pin 10 of 17 returns to high logic level together with the high logic level at pin 11 of 16 makes that the output of the NAND 14 turns to low logic level which resets the flip-flop 3, 4 and leaves everything in rest conditions.

The assembly R1, R2, D1 and C1 makes the initial reset of the system and immediately the micro contact, in case the cartridge is pulled out, as the above mentioned assembly is left without power supply, makes that the system always remain in a reset situation, without affecting the audio amplifier.

LIGHTS MODULATOR CIRCUIT

The function of this circuit is the one of making the lights to follow, more or less, the modulation of the sounds emitted by the machine and, when there is no sound to make them remain faded.

Operation:

With D1 and C1 10 Va is rectified and the power supply tension of the triggering circuit formed by Q1, R1, R2, R3, C2, C3 is obtained.

In absence of sound R1, it holds blockaded the transistor Q1 and therefore there is no firing current for the triac T1 and the lights remain unlit. When by means of the loud-speaker a signal to R2 is applied, C2 the condenser is loaded and unloaded in accordance with the input signal, this provokes the bias of the Q1 which, through R3, will fire the gate circuit of the triac T1 and the lights will lit.

- - - - - - -

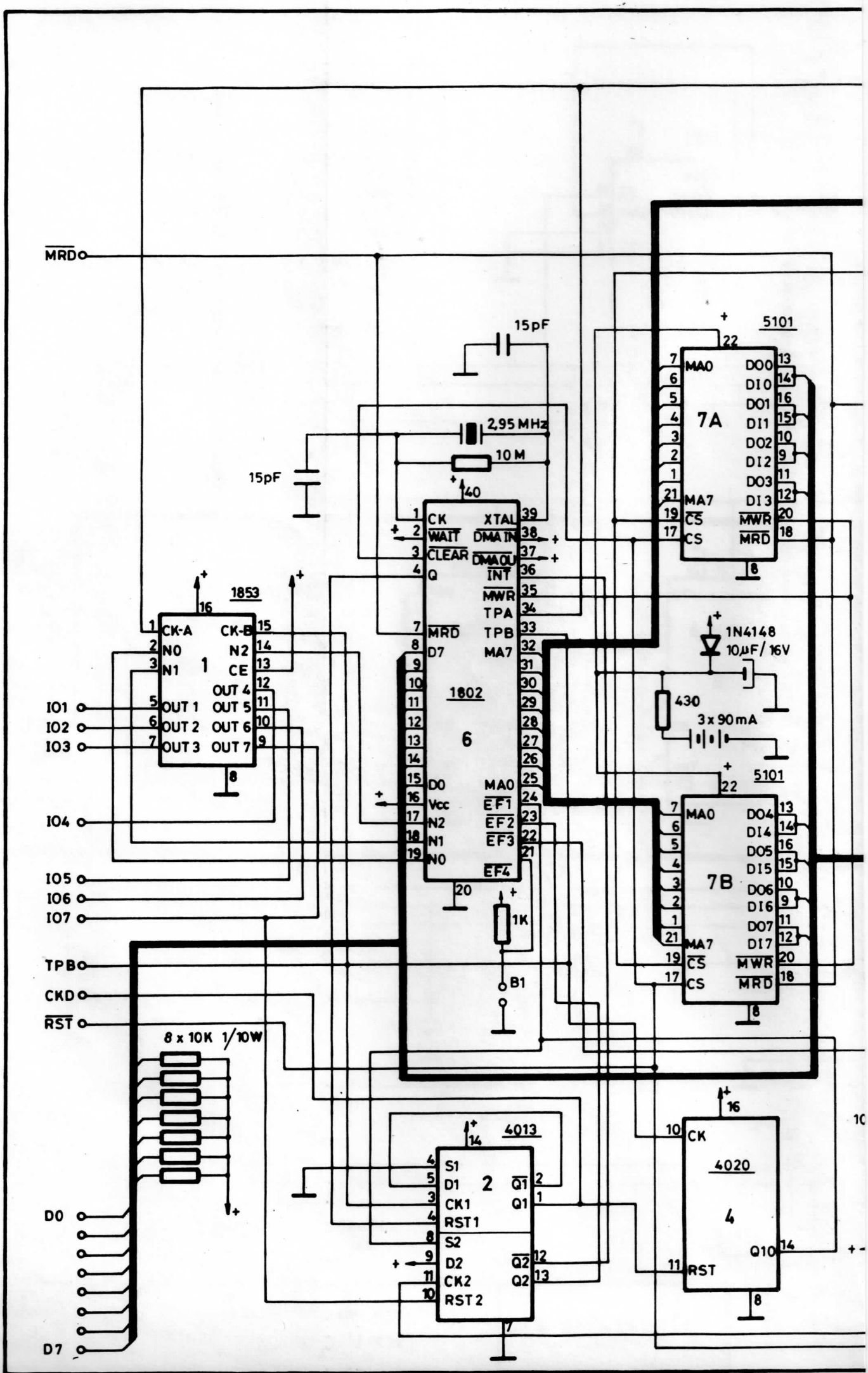
MRD
15pF
2,95 MHz
10 M
15pF
40
CK
XTAL
WAIT
DMA IN
CLEAR
DMA OU
Q
INT
MWR
TPA
MRD
TPB
D7
MA7
1802
6
D0
MA0
Vcc
EF1
N2
EF2
N1
EF3
N0
EF4
20
1K
B1
1853
16
CK-A
CK-B
N0
N2
N1
1
CE
OUT 4
OUT 1
OUT 5
OUT 2
OUT 6
OUT 3
OUT 7
8
IO1
IO2
IO3
IO4
IO5
IO6
IO7
TPB
CKD
RST
8 x 10K 1/10W
D0
D7
5101
22
MA0
DO0
DI0
DO1
7A
DI1
DO2
DI2
DO3
MA7
DI3
CS
MWR
CS
MRD
8
1N4148
10µF/ 16V
430
3 x 90 mA
5101
22
MA0
DO4
DI4
DO5
7B
DI5
DO6
DI6
DO7
MA7
DI7
CS
MWR
CS
MRD
8
4013
14
S1
D1
2
Q1
CK1
Q1
RST1
S2
D2
Q2
CK2
Q2
RST 2
7
16
CK
4020
4
Q10
RST
8
10

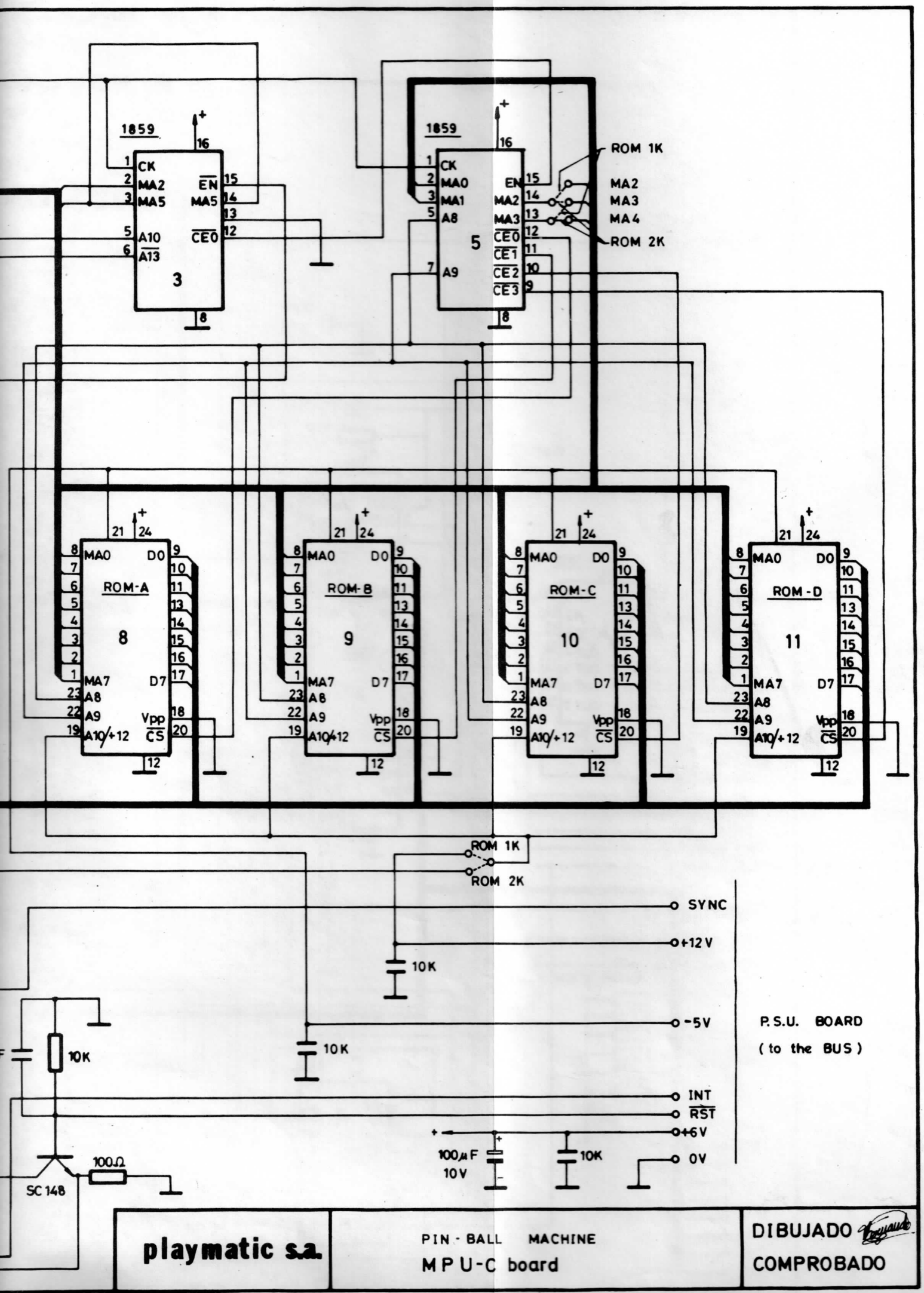
1859
3
CK
MA2
MA5
A10
A13
EN
MA5
CE0
1859
5
CK
MA0
MA1
A8
A9
EN
MA2
MA3
CE0
CE1
CE2
CE3
ROM 1K
MA2
MA3
MA4
ROM 2K
ROM-A
8
ROM-B
9
ROM-C
10
ROM-D
11
MA0
D0
MA7
D7
A8
A9
A10/+12
Vpp
CS
ROM 1K
ROM 2K
SYNC
+12 V
10K
-5V
10K
10K
INT
RST
+6V
100µF
10V
10K
0V
100Ω
SC 148
P.S.U. BOARD
(to the BUS)
playmatic s.a.
PIN - BALL MACHINE
MPU-C board
DIBUJADO
COMPROBADO

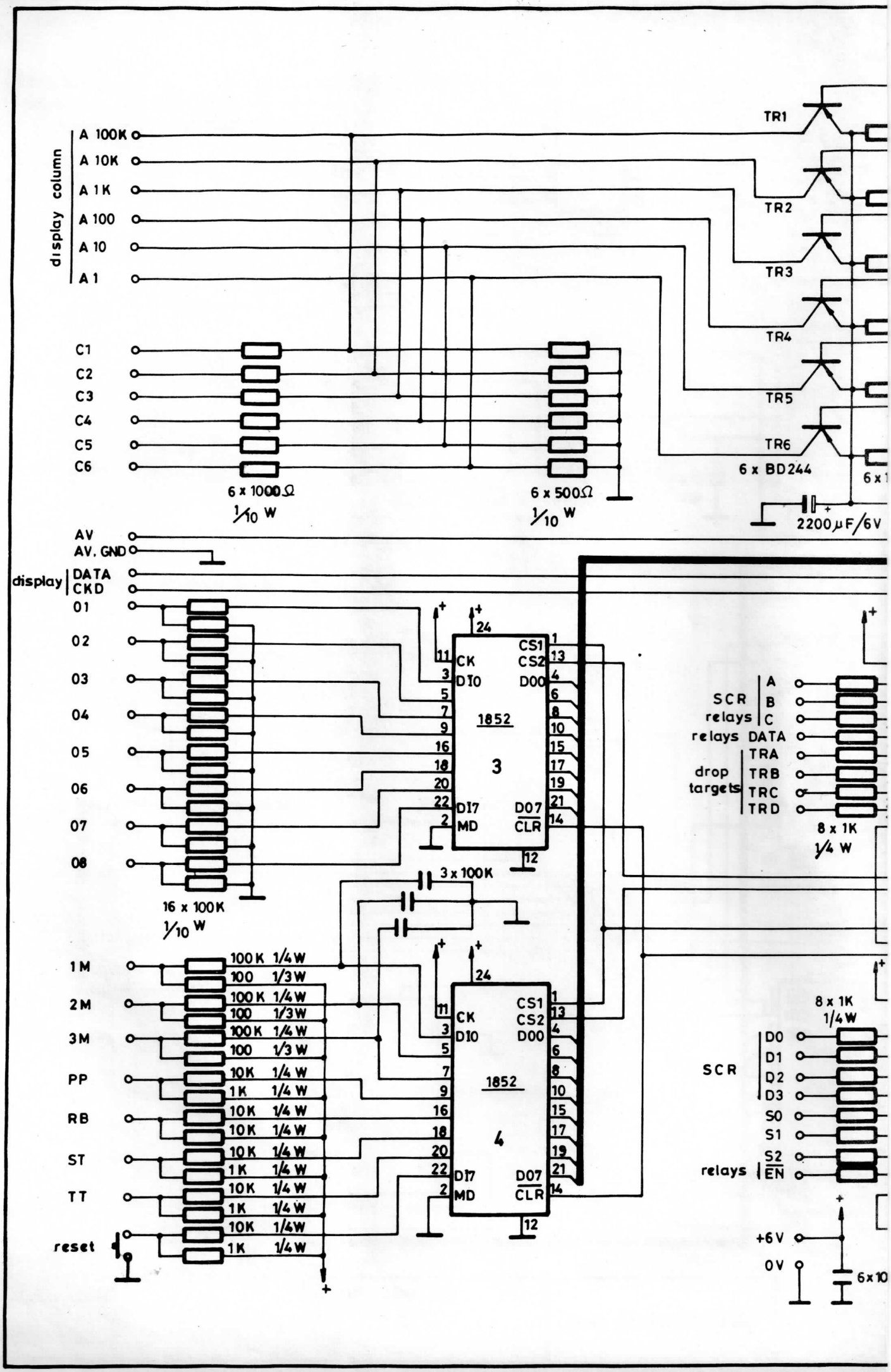
display column
A 100K
A 10K
A 1K
A 100
A 10
A 1
C1
C2
C3
C4
C5
C6
6 x 1000Ω
1/10 W
6 x 500Ω
1/10 W
TR1
TR2
TR3
TR4
TR5
TR6
6 x BD244
2200µF/6V
AV
AV. GND
display
DATA
CKD
01
02
03
04
05
06
07
08
16 x 100K
1/10 W
1852
3
1852
4
3 x 100K
1M
2M
3M
PP
RB
ST
TT
reset
100K 1/4W
100 1/3W
10K 1/4W
1K 1/4W
SCR relays
A
B
C
relays DATA
drop targets
TRA
TRB
TRC
TRD
8 x 1K
1/4 W
SCR
D0
D1
D2
D3
S0
S1
relays
S2
EN
+6V
0V
6x10

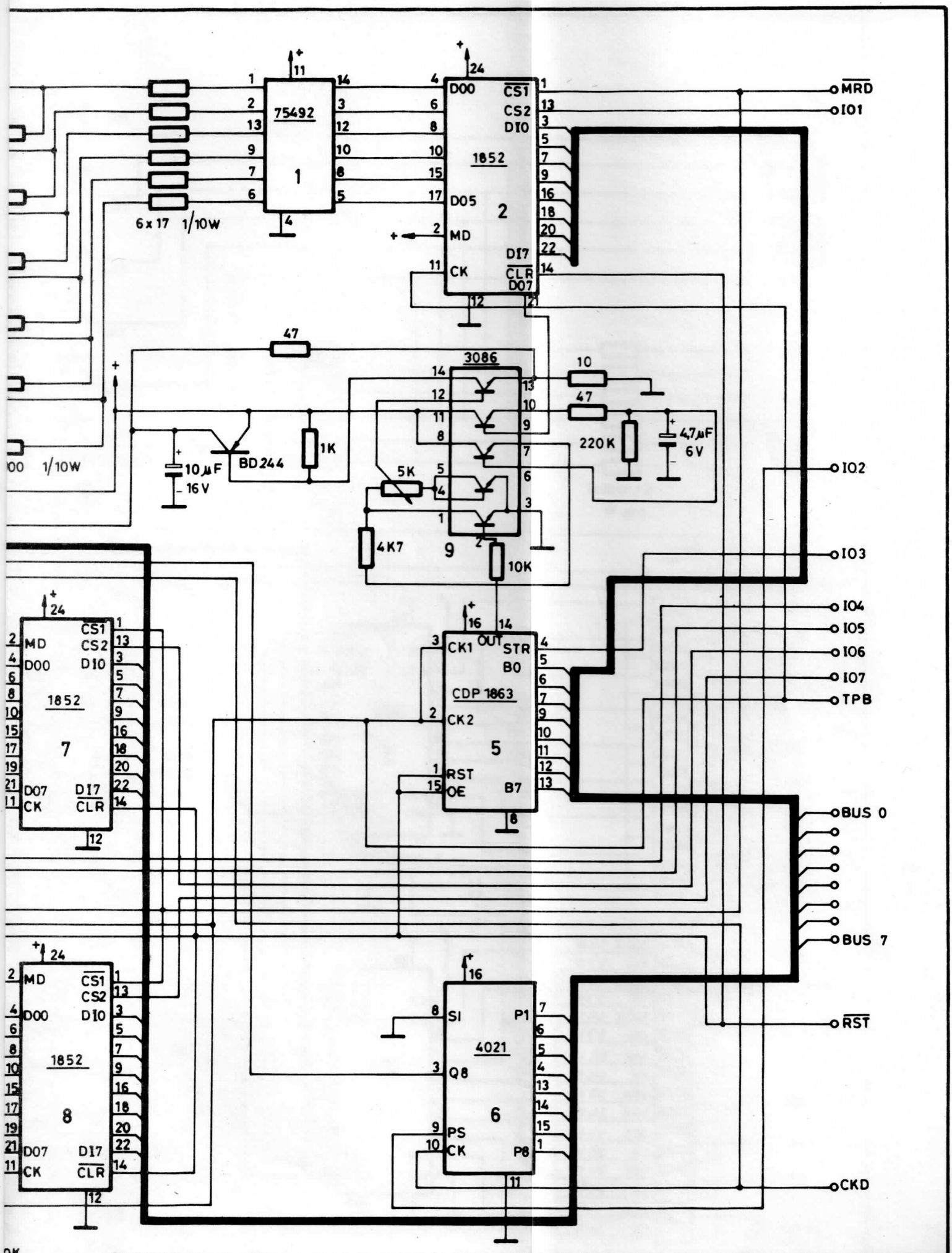

playmatic s.a.	PIN-BALL MACHINE IOS - II	DIBUJADO COMPROBADO

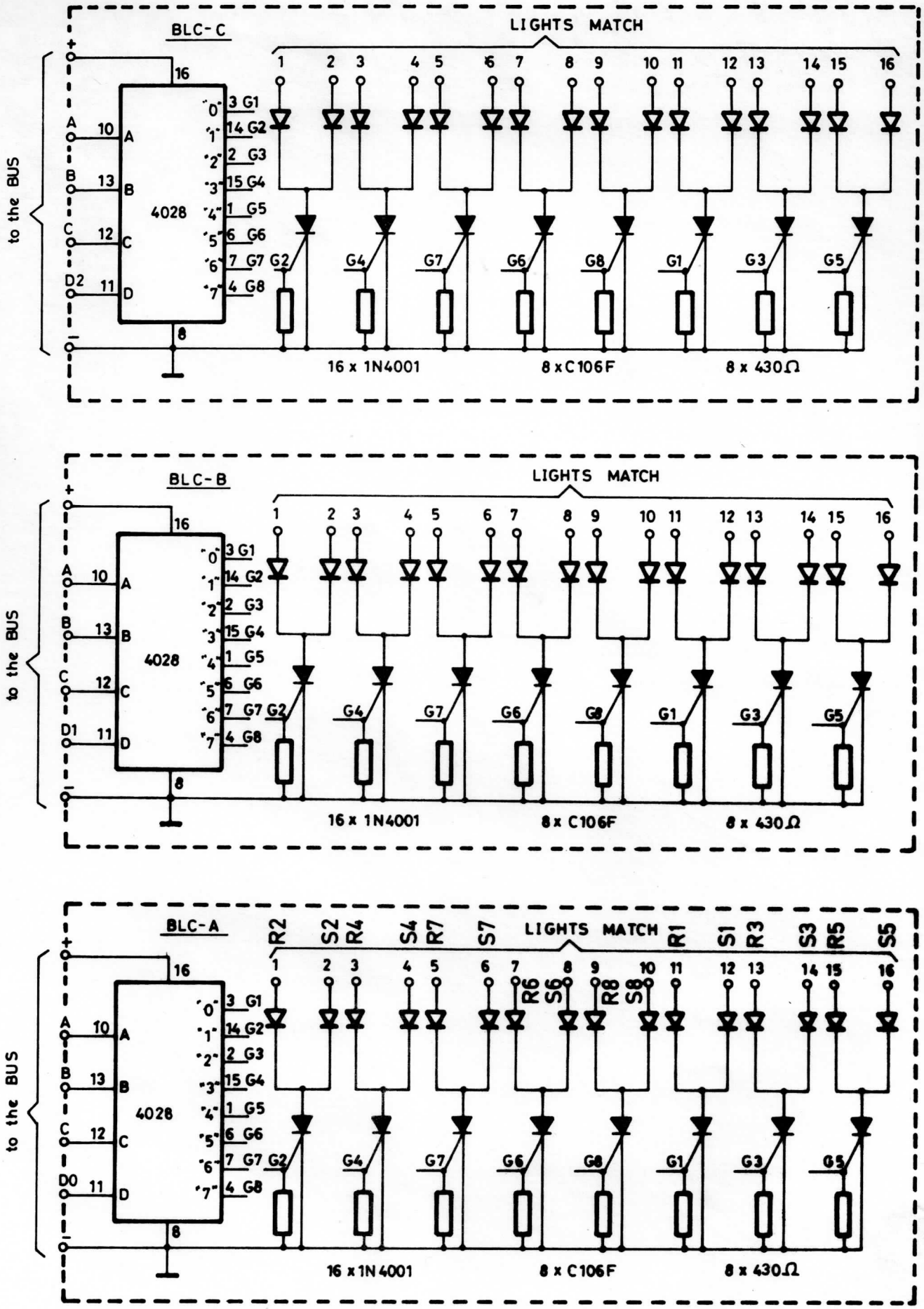

playmatic s.a.	PIN - BALL MACHINE B.L.C. board (A,B,C)	DIBUJADO COMPROBADO

playmatic s.a.

PIN · BALL MACHINE

P.S.U. board

DIBUJADO

COMPROBADO

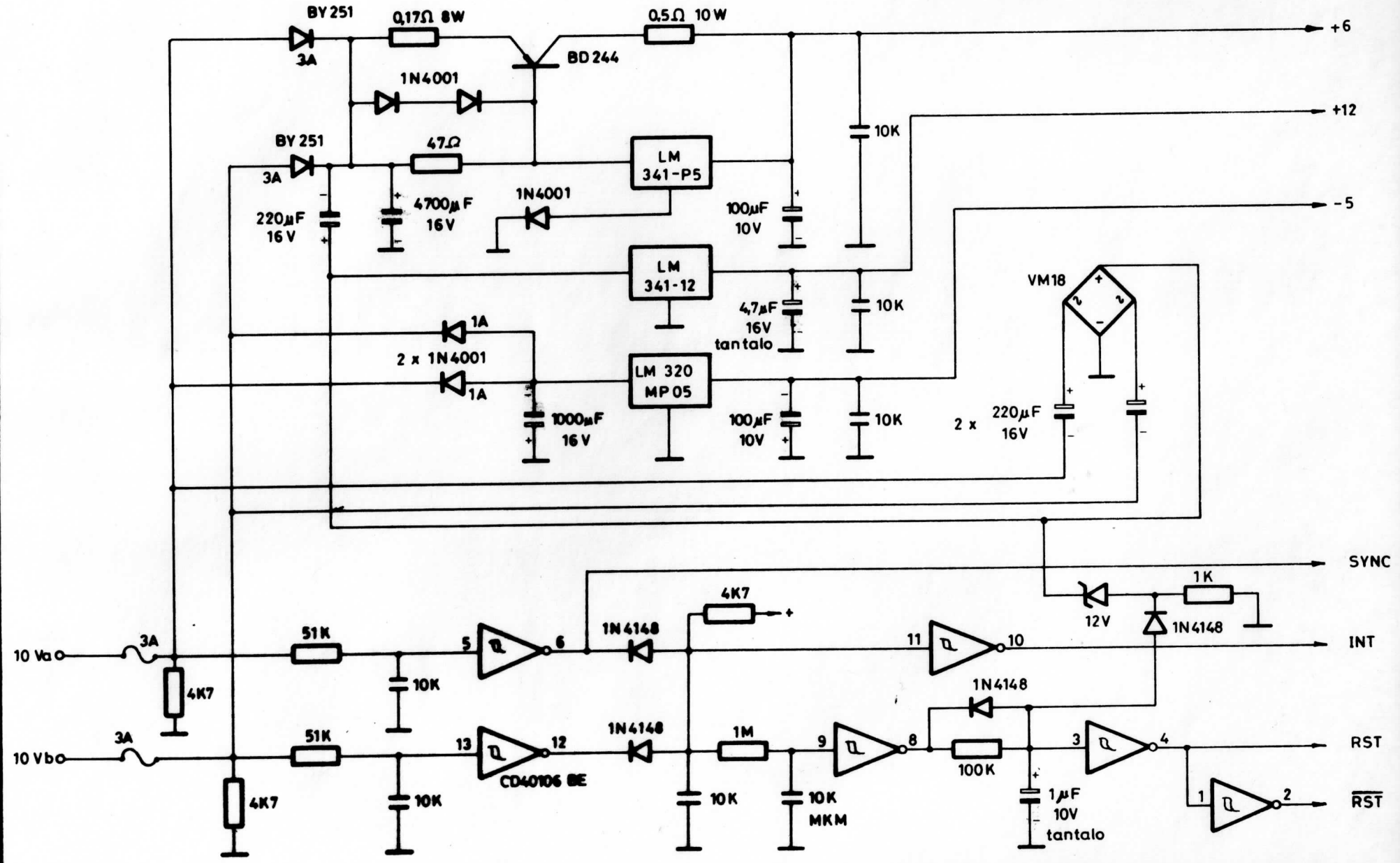

playmatic s.a.

PIN-BALL MACHINE

B.S.C. (RELAYS) board

DIBUJADO

COMPROBADO

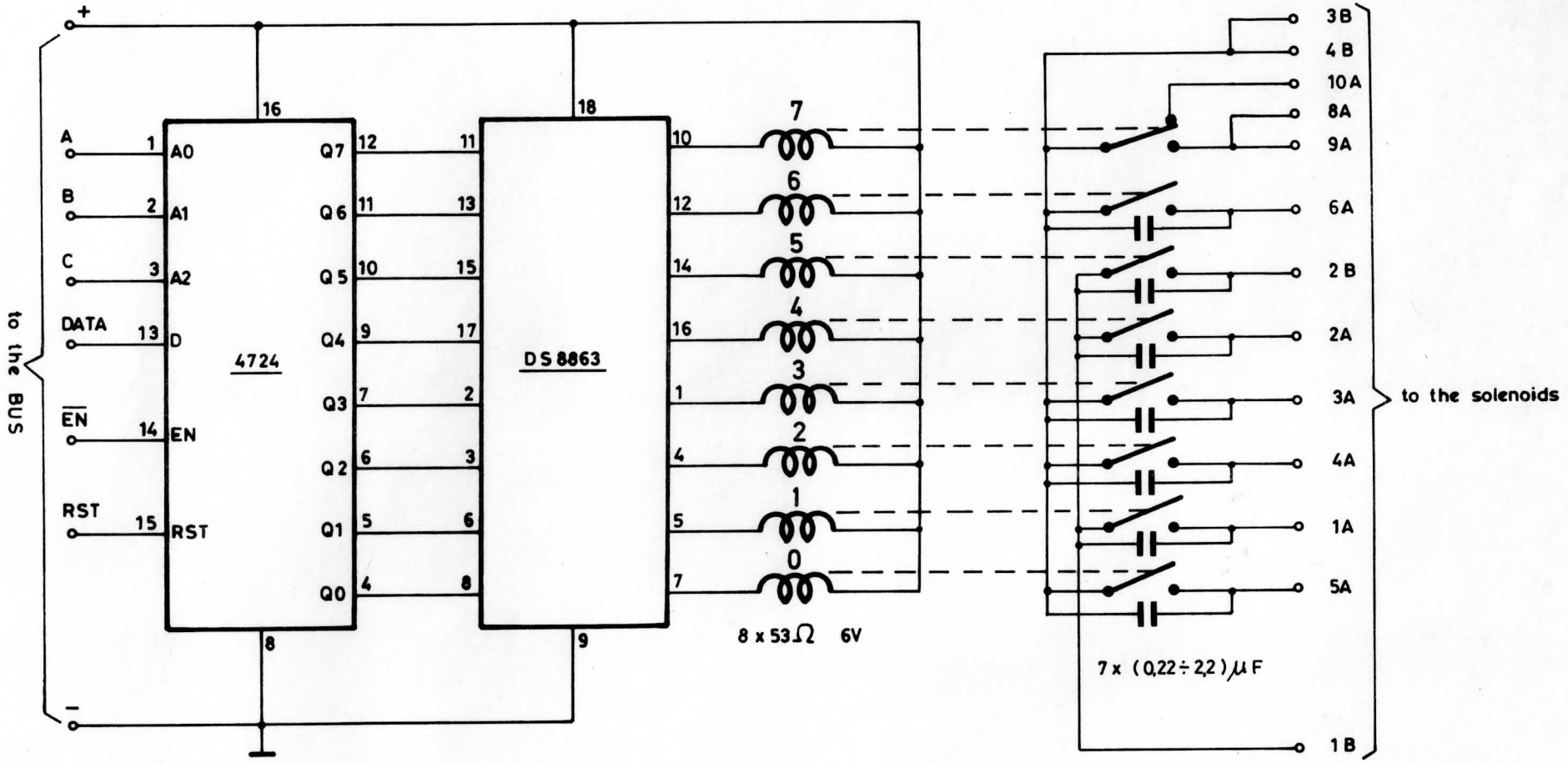

playmatic s.a.

PIN-BALL MACHINE

DISPLAYS board (D.P.Y.)

DIBUJADO

COMPROBADO

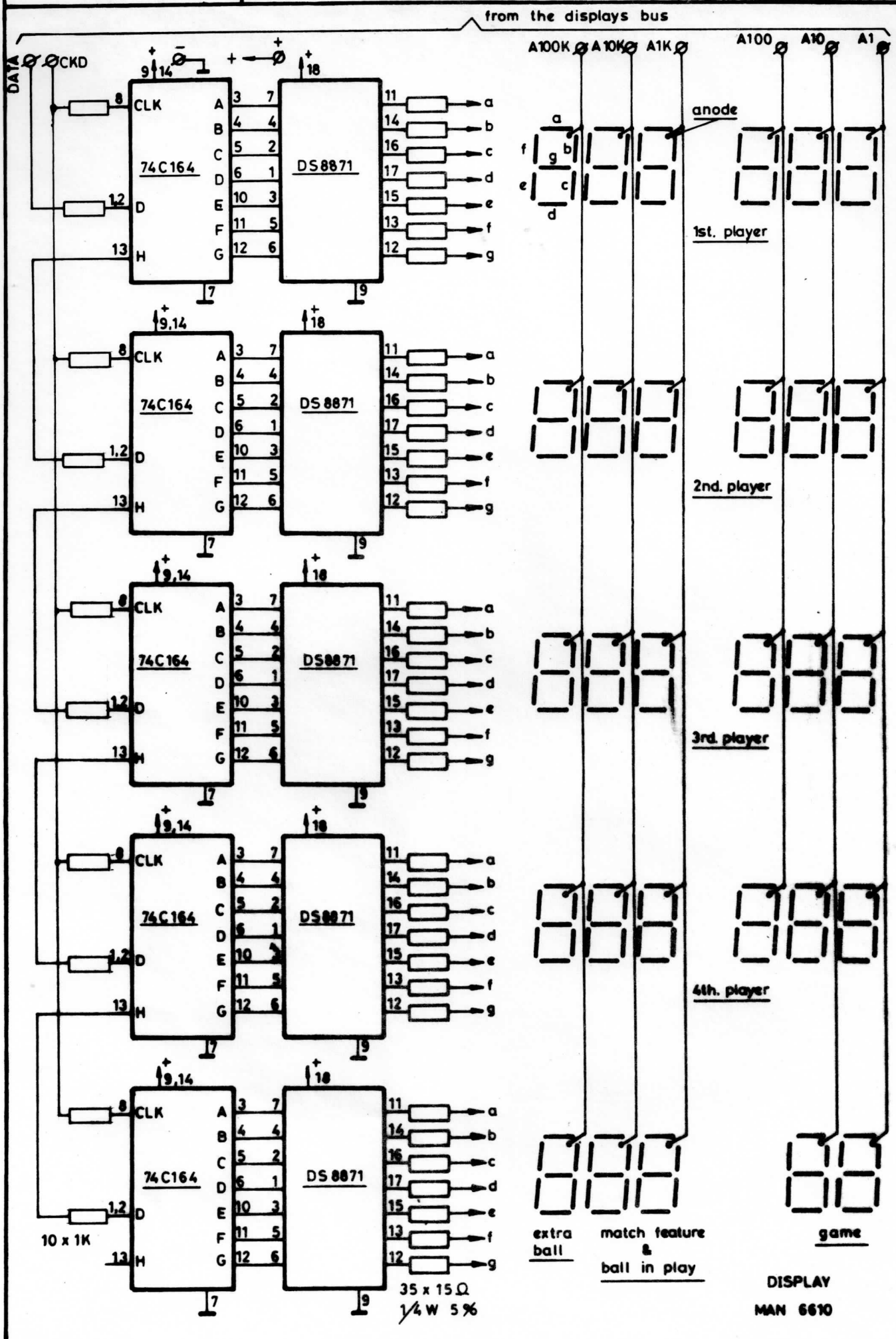

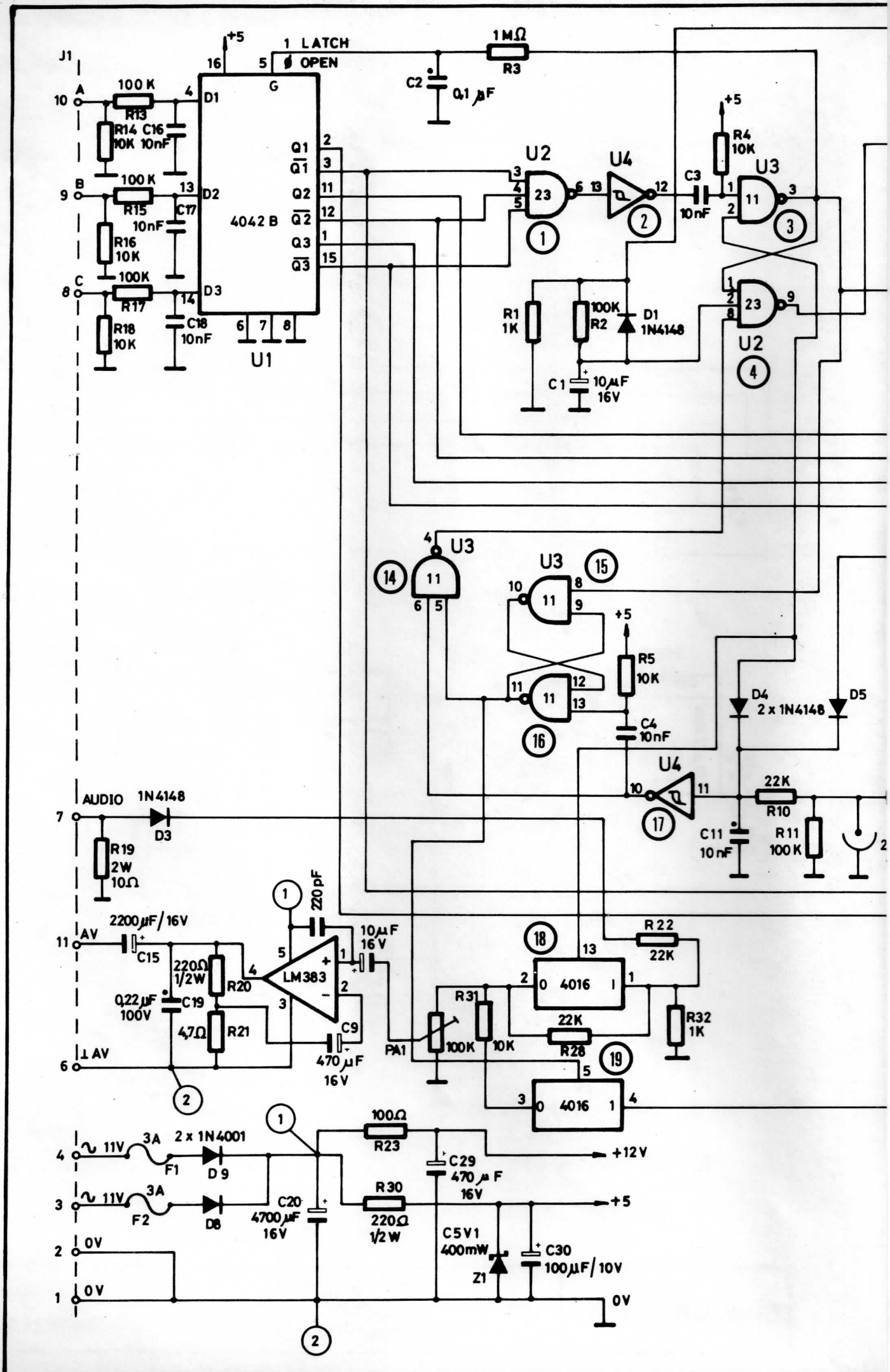

J1
+5
1 LATCH
ø OPEN
1MΩ
R3
C2
0,1 µF
100 K
R13
R14 10K
C16 10nF
R15
C17 10nF
R16 10K
R17
R18 10K
C18 10nF
4042 B
U1
U2
U4
U3
R4 10K
C3 10nF
R1 1K
R2 100K
D1 1N4148
C1 10µF 16V
R5 10K
C4 10nF
D4 2 x 1N4148
D5
22K
R10
C11 10nF
R11 100K
AUDIO
1N4148
D3
R19 2W 10Ω
2200µF/16V
C15
220Ω 1/2W
R20
0,22µF 100V
C19
4,7Ω
R21
220pF
LM383
10µF 16V
C9
470µF 16V
PA1
100K
R31
10K
R22
22K
4016
R28
R32 1K
AV
⊥ AV
11V
3A
F1
2 x 1N4001
D9
F2
D8
C20 4700µF 16V
100Ω
R23
C29 470µF 16V
R30
220Ω 1/2W
C5V1 400mW
Z1
C30 100µF/10V
+12V
+5
0V

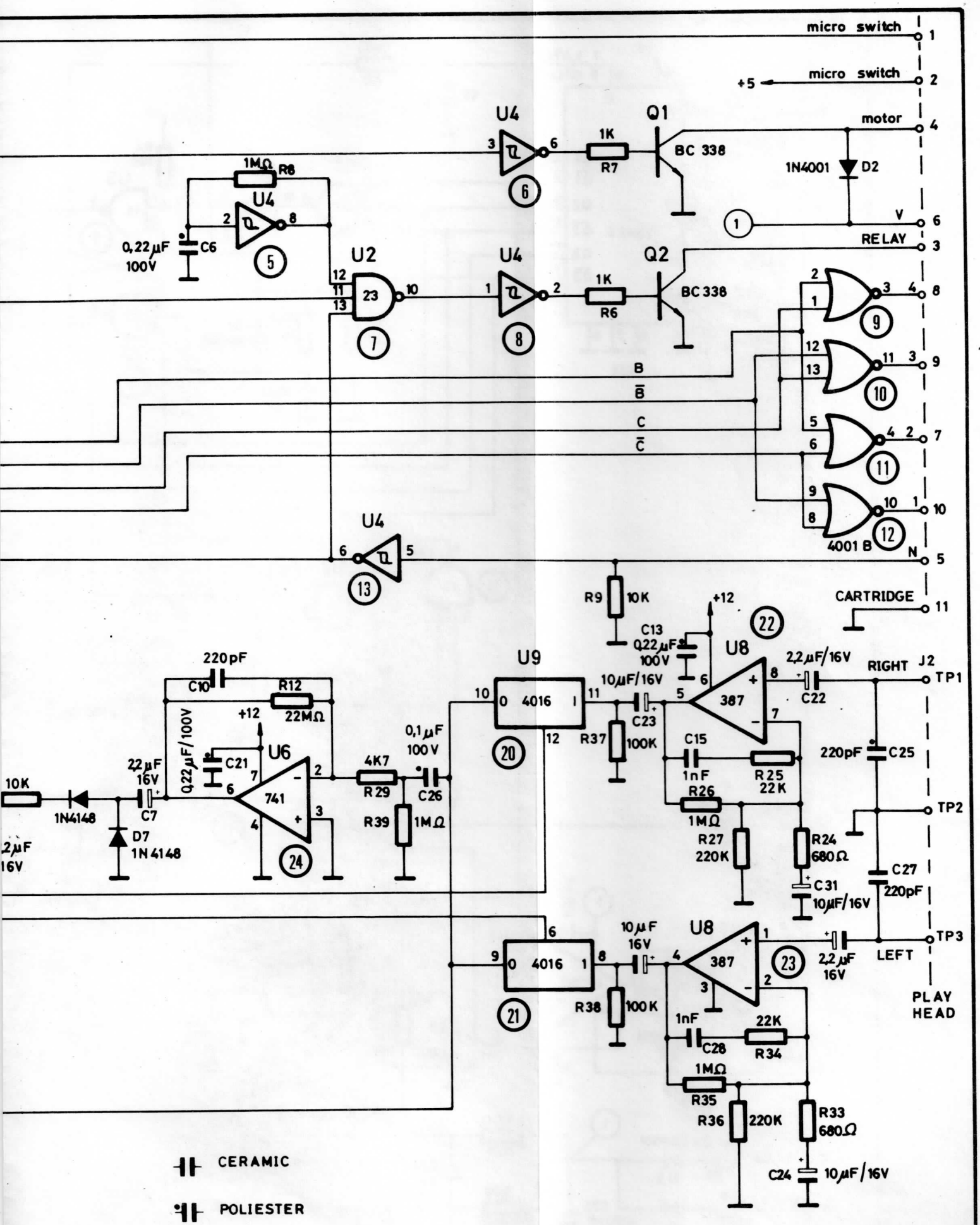

playmatic s.a.	PIN-BALL MACHINE SPEAKING SYSTEM	DIBUJADO PROYECTADO

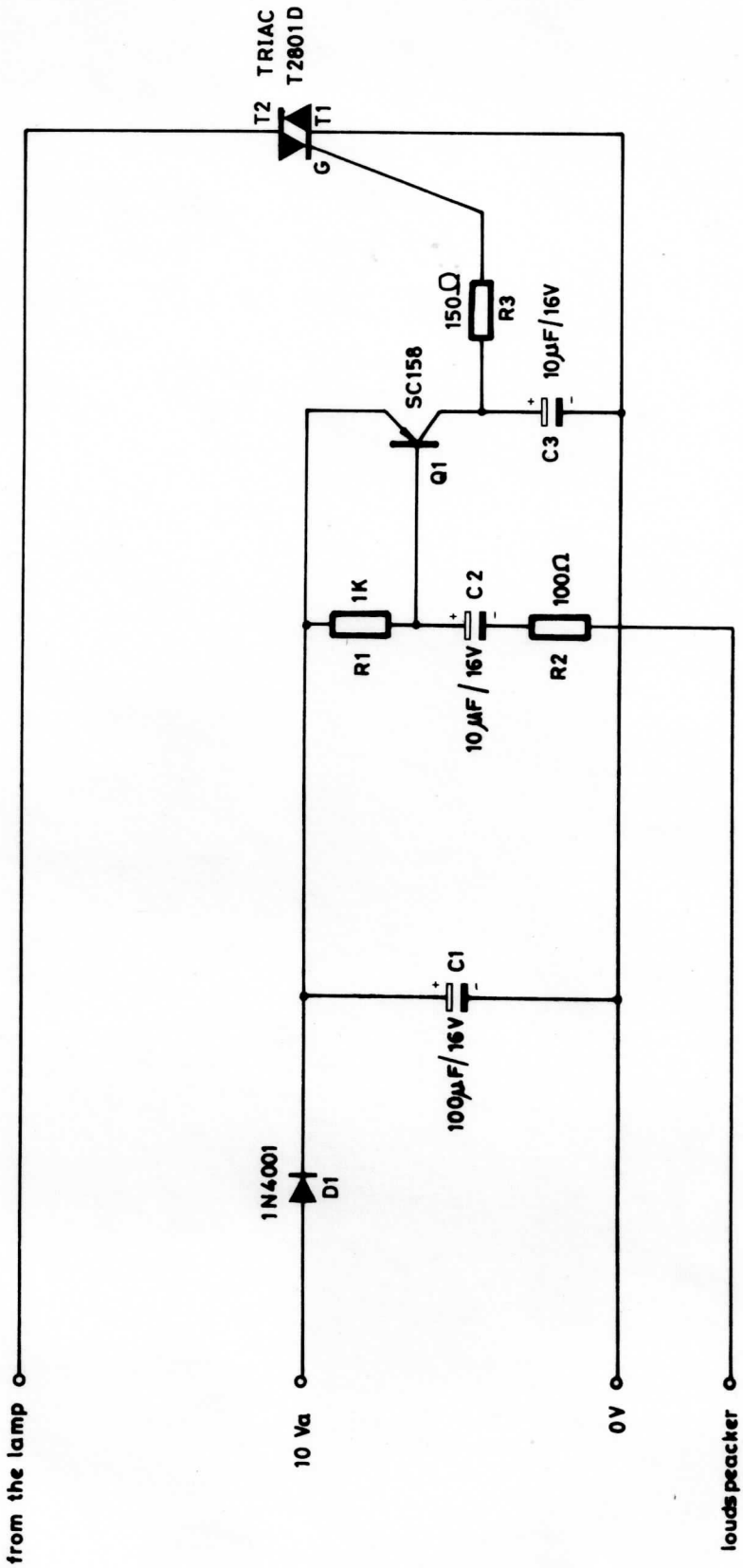

playmatic s.a.	PIN-BALL MACHINE LIGHT MODULATOR	DIBUJADO PROYECTADO

SWITCHES

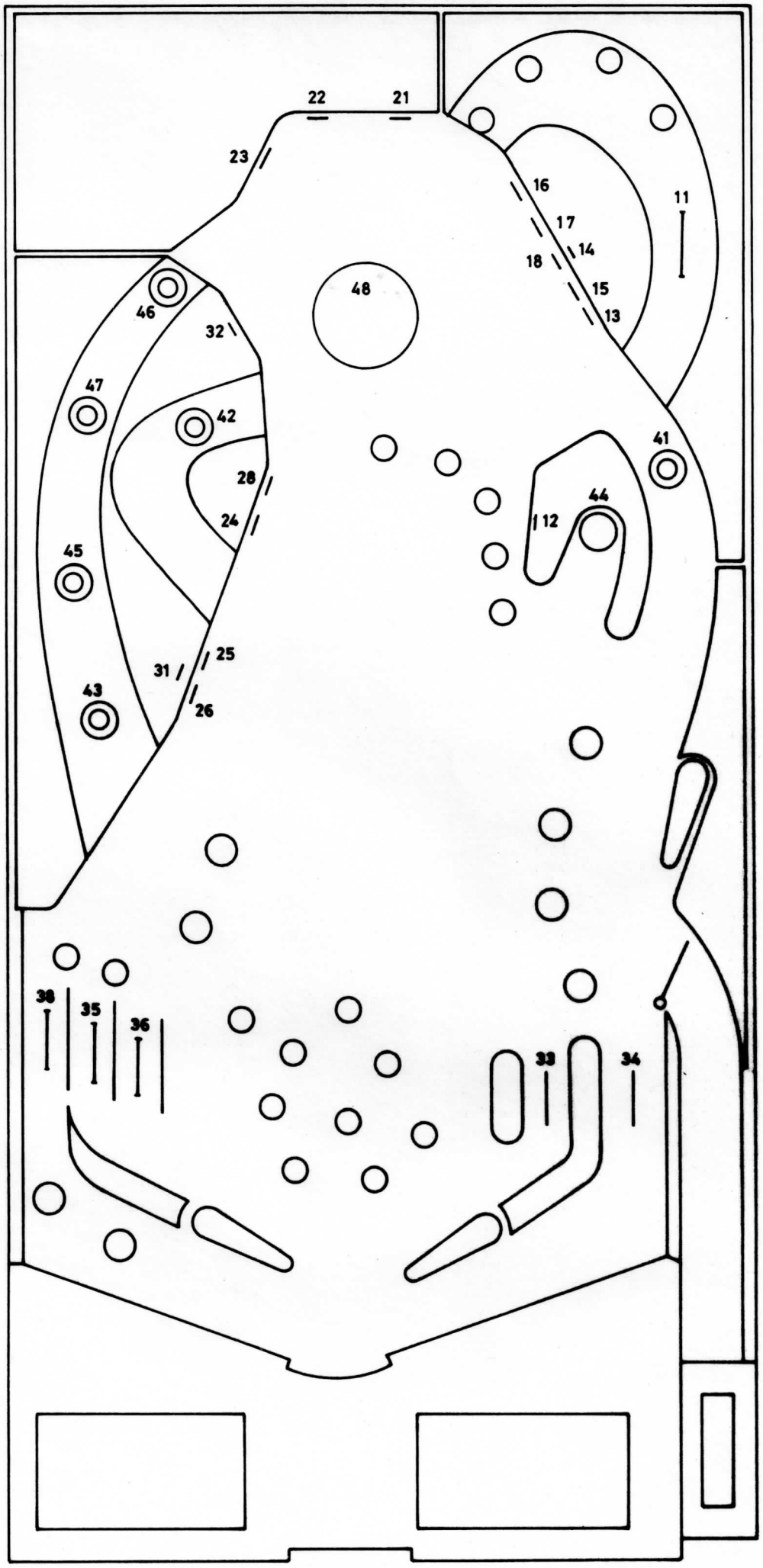
22
21
23
16
17
14
18
15
13
11
48
46
32
47
42
41
28
24
44
12
45
31
25
26
43
38
35
36
33
34

LITES

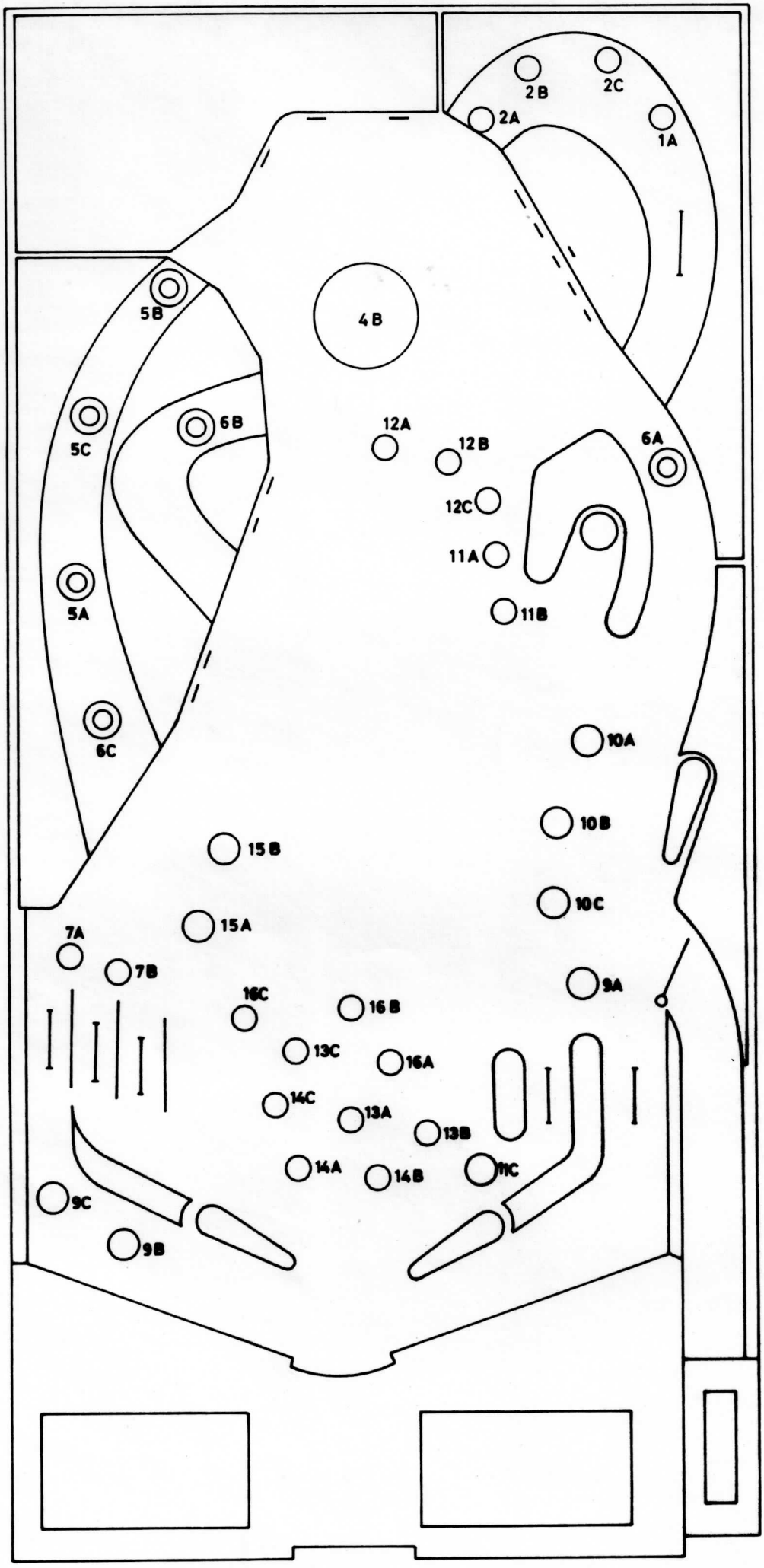
2B
2C
2A
1A
5B
4B
5C
6B
12A
12B
6A
12C
11A
5A
11B
6C
10A
10B
15B
10C
15A
7A
7B
9A
16C
16B
13C
16A
14C
13A
13B
14A
14B
11C
9C
9B

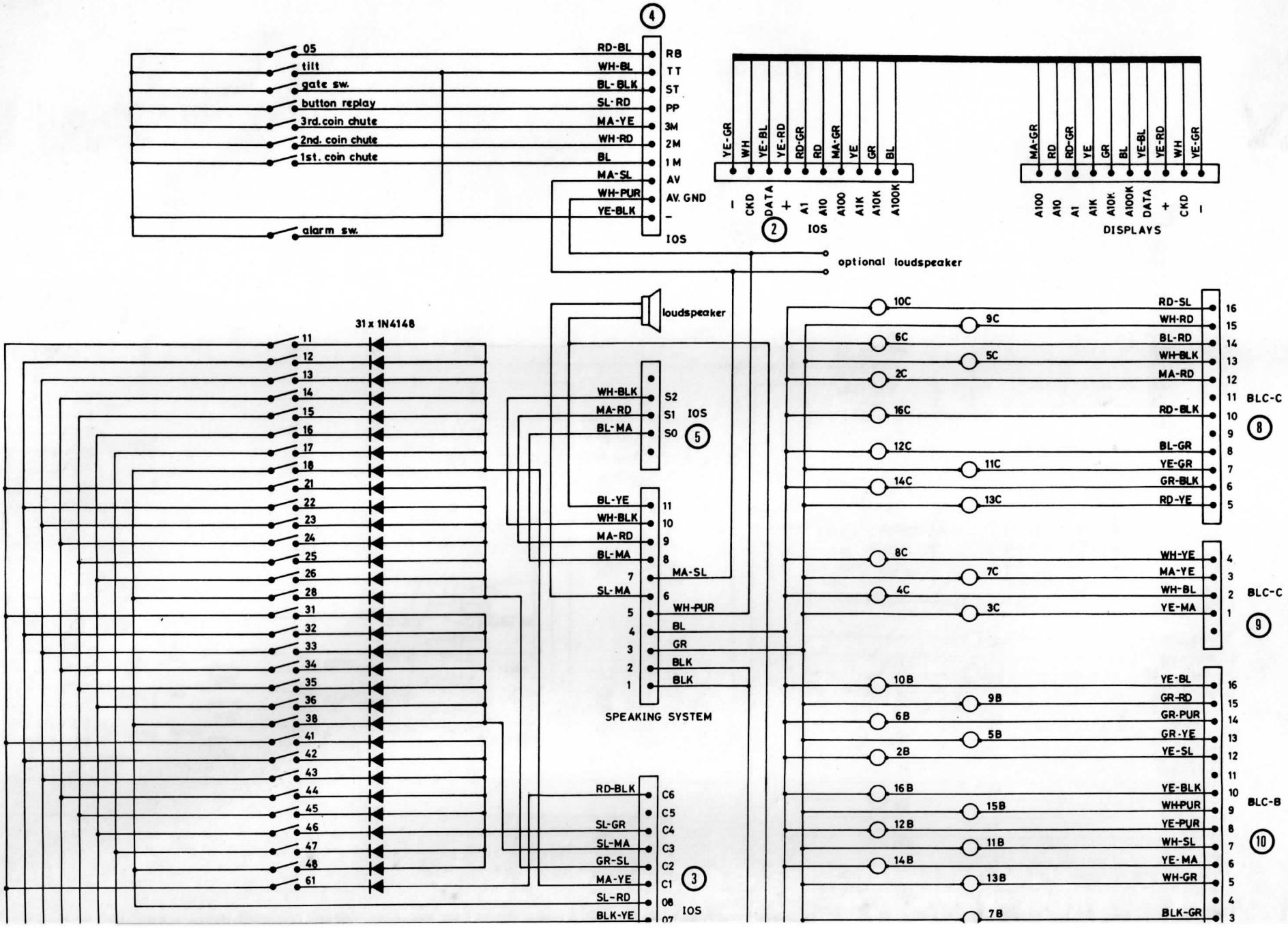
4
05
tilt
gate sw.
button replay
3rd.coin chute
2nd. coin chute
1st. coin chute
alarm sw.
RD-BL
WH-BL
BL-BLK
SL-RD
MA-YE
WH-RD
BL
MA-SL
WH-PUR
YE-BLK
RB
TT
ST
PP
3M
2M
1 M
AV
AV. GND
–
IOS
YE-GR
WH
YE-BL
YE-RD
RD-GR
RD
MA-GR
YE
GR
BL
– CKD DATA + A1 A10 A100 A1K A10K A100K
2
IOS
MA-GR
RD
RD-GR
YE
GR
BL
YE-BL
YE-RD
WH
YE-GR
A100 A10 A1 A1K A10K A100K DATA + CKD –
DISPLAYS
optional loudspeaker
loudspeaker
31 x 1N4148
11
12
13
14
15
16
17
18
21
22
23
24
25
26
28
31
32
33
34
35
36
38
41
42
43
44
45
46
47
48
61
WH-BLK
MA-RD
BL-MA
S2
S1
S0
IOS
5
BL-YE
WH-BLK
MA-RD
BL-MA
MA-SL
SL-MA
WH-PUR
BL
GR
BLK
BLK
SPEAKING SYSTEM
RD-BLK
SL-GR
SL-MA
GR-SL
MA-YE
SL-RD
BLK-YE
C6
C5
C4
C3
C2
C1
08
07
3
IOS
10C
9C
6C
5C
2C
16C
12C
11C
14C
13C
RD-SL
WH-RD
BL-RD
WH-BLK
MA-RD
RD-BLK
BL-GR
YE-GR
GR-BLK
RD-YE
BLC-C
8
8C
7C
4C
3C
WH-YE
MA-YE
WH-BL
YE-MA
BLC-C
9
10B
9B
6B
5B
2B
16B
15B
12B
11B
14B
13B
7B
YE-BL
GR-RD
GR-PUR
GR-YE
YE-SL
YE-BLK
WH-PUR
YE-PUR
WH-SL
YE-MA
WH-GR
BLK-GR
BLC-B
10

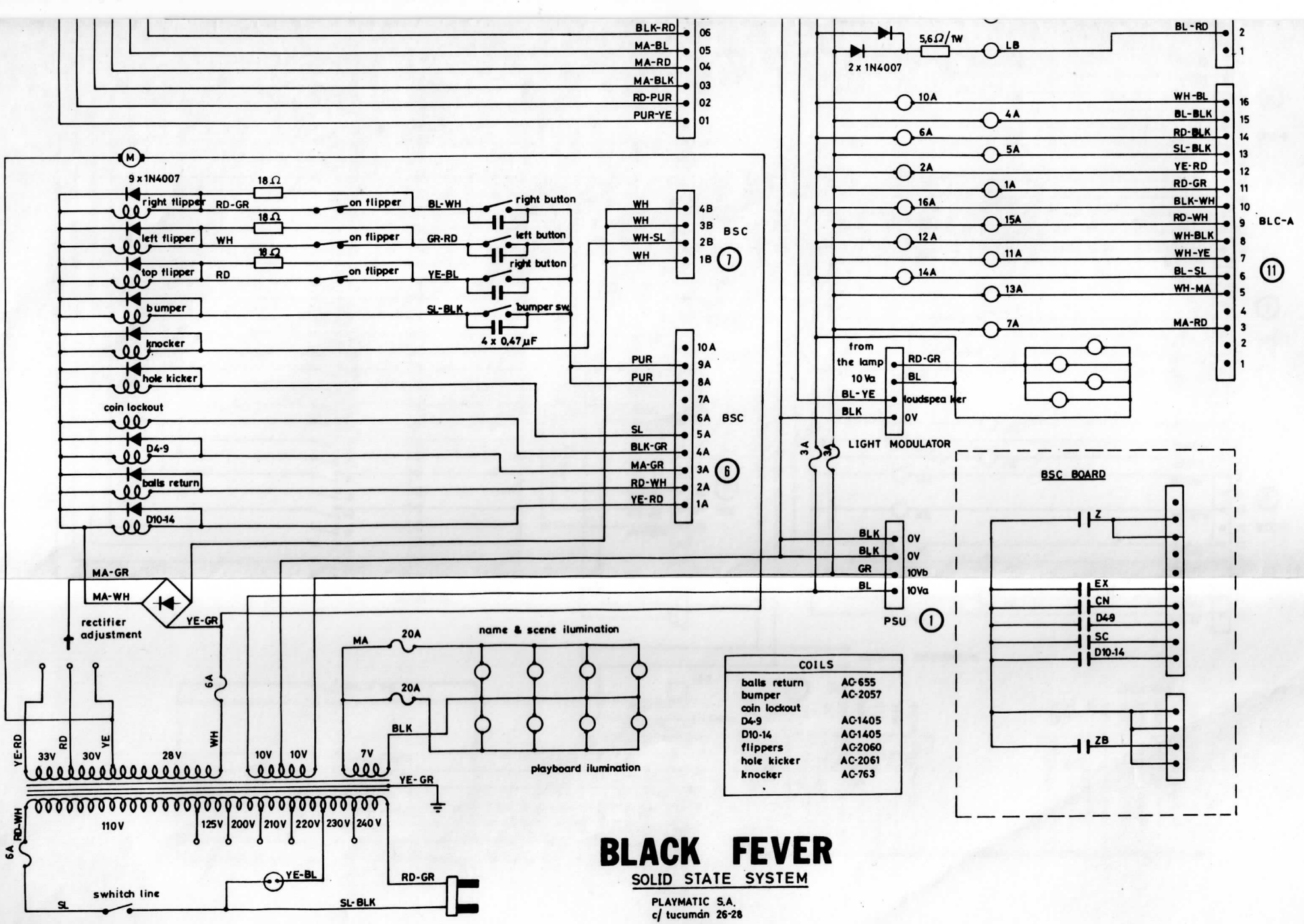

COILS	
balls return	AC-655
bumper	AC-2057
coin lockout	
D4-9	AC-1405
D10-14	AC-1405
flippers	AC-2060
hole kicker	AC-2061
knocker	AC-763

BLACK FEVER

SOLID STATE SYSTEM

PLAYMATIC S.A.
c/ tucumán 26-28
telf. 345 85 04
TELEX 53912 PLAY E
BARCELONA (SPAIN)

INSTRUCTIONS "BLACK FEVER" 4 PLAYERS

- For each pair of green targets dropped lit X2, X3 and X5, which multiply bonus value, and "Prepare Special". Special is got by dropping all green targets when "PrepareSpecial" is lit.
- Each red target dropped lits a star. They return to former position by rollover located behind red targets bank.
- 50.000 and Special by left gate away rollover, are got by the target located behind the white drop target and by the kickout hole.
- Extra Ball is got by the kickout hole.
- TILT only penalizes ball in play.

REPLAYS

- By green targets.
- Dropping all targets.
- By left gate away.
- By high score.
- By match feature.
- By scoring more than the recorded "High score to date".

3 BALLS PER GAME

1 REPLAY	AT	POINTS
2 REPLAYS	AT	POINTS
3 REPLAYS	AT	POINTS