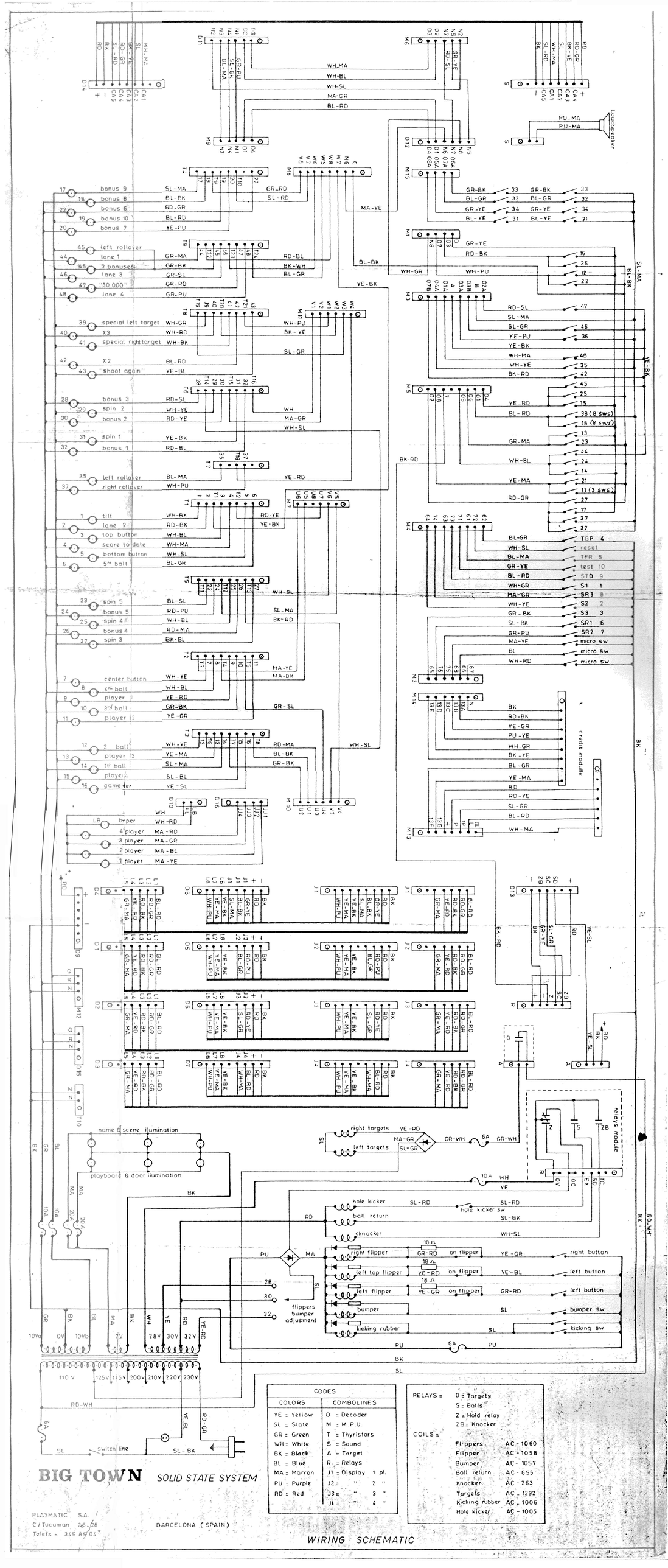

CODES	
COLORS	COMBOLINES
YE = Yellow	D = Decoder
SL = Slate	M = M.P.U.
GR = Green	T = Thyristors
WH = White	S = Sound
BK = Black	A = Target
BL = Blue	R = Relays
MA = Marron	J1 = Display 1 pl.
PU = Purple	J2 = " 2 "
RD = Red	J3 = " 3 "
	J4 = " 4 "

RELAYS =	D = Targets
	S = Balls
	Z = Hold relay
	ZB = Knocker
COILS =	
Flippers	AC - 1060
Flipper	AC - 1058
Bumper	AC - 1057
Ball return	AC - 655
Knocker	AC - 263
Targets	AC - 1292
Kicking rubber	AC - 1006
Hole kicker	AC - 1005

BIG TOWN *SOLID STATE SYSTEM*

PLAYMATIC S.A.
C/Tucuman 26-28
Telefs = 345 89 04
BARCELONA (SPAIN)

WIRING SCHEMATIC